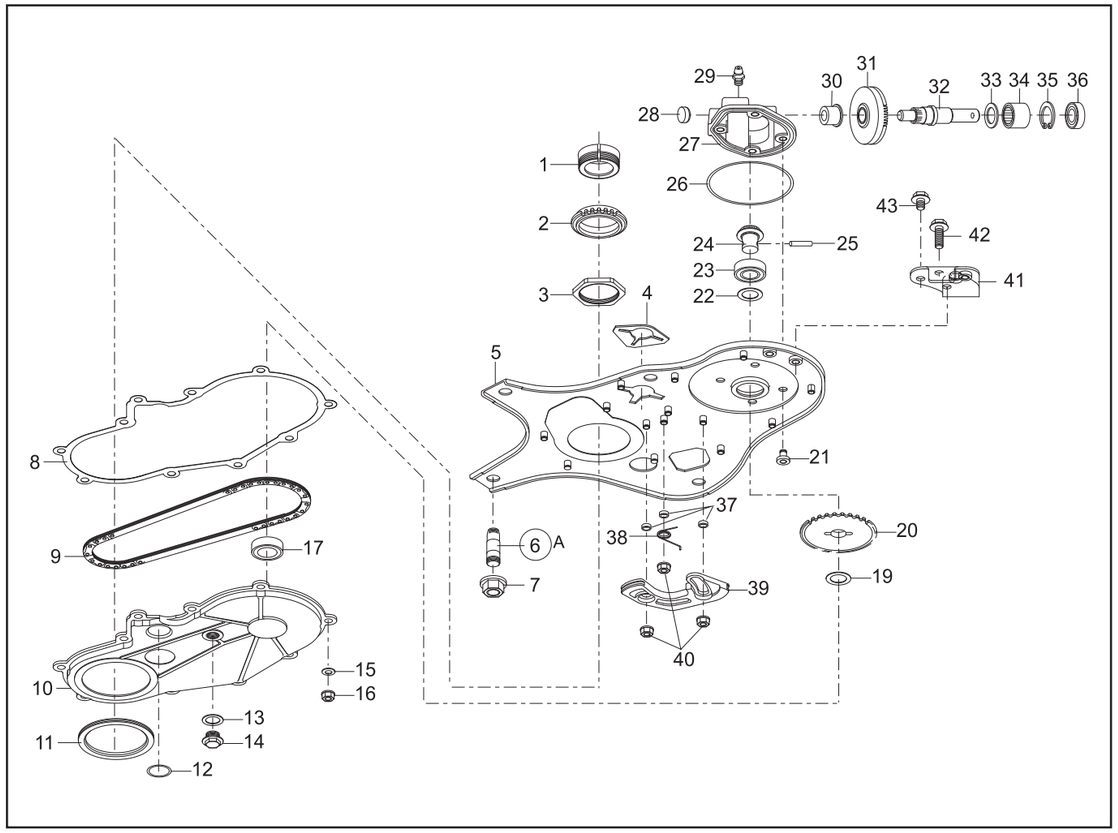

PARTS LIST

P/L No. 46014-388-01

NOTE	REF. No.	PARTS No.	PARTS NAME	Drive Shaft Unit Q'TY	INCLUDING			PRICE( )	1/2 RECOMM.(%) Lot.100		Dec. 26. 2006 REMARKS
	1	51113 120	RING	1							
	2	36112 146	SPROCKET	1							
	3	31058 173	HEXAGON NUT	1							
	4	61019 232	PACKING	1							
	5	11137 132	BASE C.P.	1							
A	6	31039 141	STUD	4							
	7	579L 1000	FLANGE NUT	4							
	8	61019 233	PACKING	1							
	9	91074 136	CHAIN	1							
	10	51141 102	CHAIN CASE	1							
	11	76007 196	BUSH	1							
	12	214B 1600	O-RING	1							
	13	68001 110	FIBER WASHER	1							
	14	31057 262	HEXAGON BOLT	1							
	15	68062 112	CONED DISC SPRING	11							
	16	579L 0500	FLANGE NUT	11							
	17	913B 6901	BEARING	1							
	18										
	19	68036 291	WASHER	1							
	20	36112 145	SPROCKET	1							
	21	31062 177	PRE-COAT LOCK BOLT	4							
	22	68036 291	WASHER	1							
	23	916B 6901	BEARING	1							
	24	78002 207	BEVEL PINION	1							
	25	31034 192	PIN	1							
	26	214B 6300	O-RING	1							
	27	51001 301	GEAR CASE	1							
	28	91033 140	BLIND COVER	1							

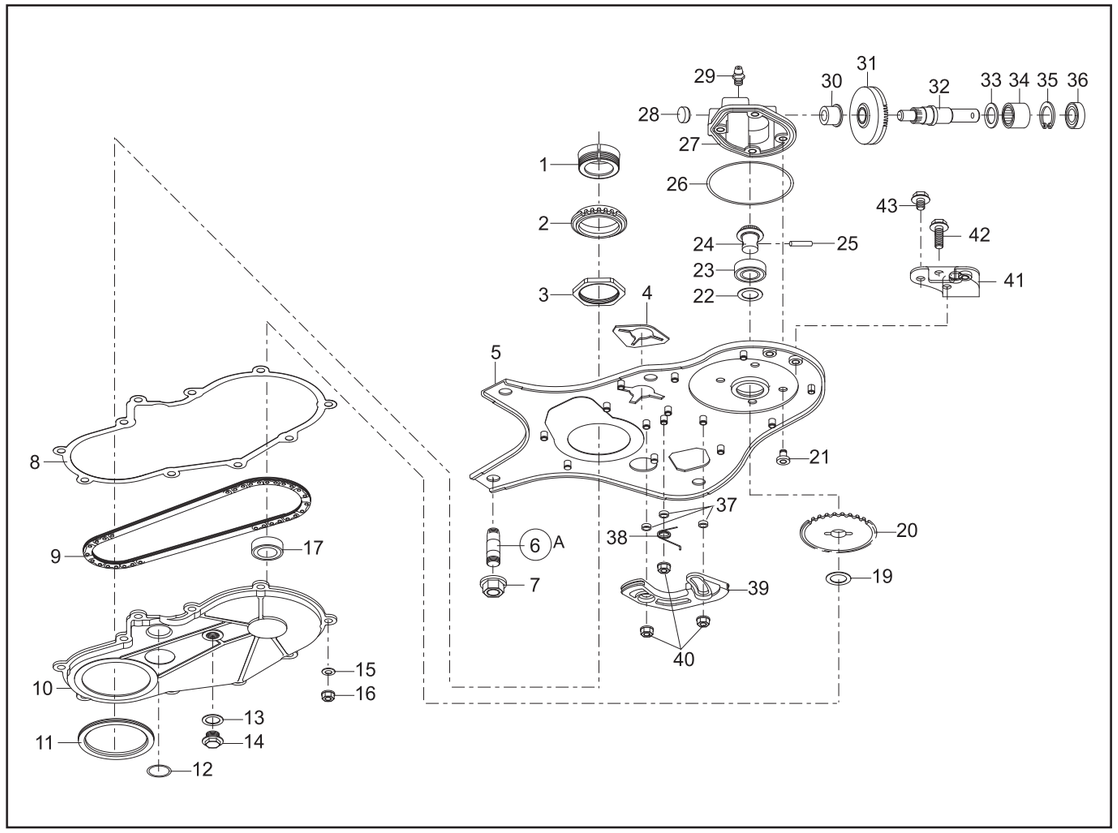

PARTS LIST

P/L No. 46014-388-01

NOTE	REF. No.	PARTS No.	PARTS NAME	Drive Shaft Unit Q'TY	INCLUDING			PRICE( )	2/2 RECOMM.(%) Lot.100		Dec. 26. 2006 REMARKS
	29	91031 102	GREASE NIPPLE	1							
	30	76007 194	BUSH	1							
	31	78001 171	BEVEL GEAR	1							
	32	64001 188	SPLINE SHAFT	1							
	33	68036 291	WASHER	1							
	34	937B 121912	BEARING	1							
	35	811V 2000	C-SNAP RING	1							
	36	61002 202	OIL SEAL	1							
	37	76007 195	BUSH	3							
	38	68013 388	SPRING	1							
	39	51104 159	GUIDE	1							
	40	579L 0500	FLANGE NUT	3							
	41	11006 163	STAY C.P.	1							
	42	342L 0630	FLANGE BOLT TAPPING	1							
	43	335L 0612	FLANGE BOLT	2							
	44										
	45										
	46										
	47										
	48										
	49										
	50										
	51										
	52										
	53										
	54										
	55										
	56										