GARSS-CUTTING-PRO	Date : 26. Mar, 2012	Revision : 02	Page : 1/1
Brand : KAAZ	Model : LM5360HXA-PRO	Product Code : 620455	

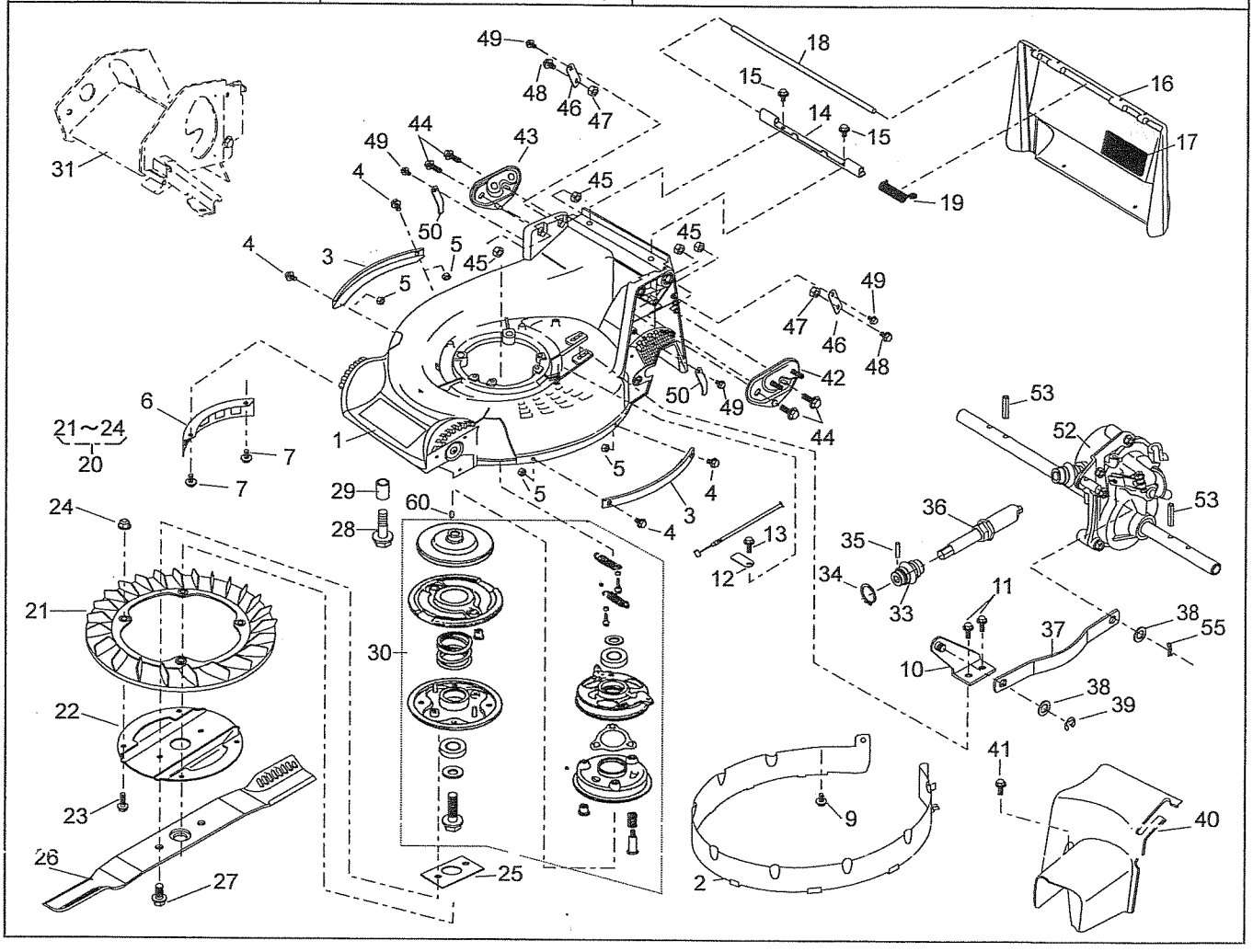

GRASS-CUTTING-PRO

Brand: KAAZ
P.cd: 620455

Date: 26-Mar-2012
Revision: 02

(A): LM5360HXA-PRO
(B):
(C):

Ref.No	Parts.No	Parts.Name	Q'ty (A)	Q'ty (B)	Q'ty (C)	Remarks	Recomm(%) Lot.100
1	51043-151-42	HOUSING	1				
2	36068-204	GUARD	1				
3	51090-117-09	PROTECTOR	2				
4	335L0616	FLANGE BOLT	4				
5	512L0600	HEXAGON NUT	4				
6	36065-180	COVER	1				
7	342L0612	FLANGE TAPPING BOLT	2				
9	342L0612	FLANGE TAPPING BOLT	1				
10	11006-155	STAY C.P.	1				
11	342L0612	FLANGE TAPPING BOLT	2				
12	11113-407	STAY	1				
13	342L0612	FLANGE TAPPING BOLT	1				
14	11113-292	STAY	1				
15	342L0612	FLANGE TAPPING BOLT	2				
16	36068-196-46	GUARD	1				
17	36080-149	RUBBER SHEET	1				
18	64014-324	SHAFT	1				
19	68013-336	SPRING	1				
20	71082-111	FAN ASS'Y	1				
21	51125-103	FAN	1				
22	11102-151	HOLDER	1				
23	31062-169	PRE-COAT LOCK BOLT	4				
24	579L0600	FLANGE NUT	4				
25	61024-208	SPACER	1				
26	91014-188	BLADE	1				
27	31057-197	HEXAGON BOLT	2				
28	31057-243	HEXAGON BOLT	4				
29	61024-142	SPACER	3				
30	71067-106	BRAKE A'Y(BBC530-KAZ	1				
33	91097-101	UNIVERSAL JOINT	1				
34	812V2000	C-SNAP RING	1				
35	717B0418	PARALLEL PIN	1				
36	71235-102	TORQUE LIMITER ASS'Y	1				
37	91049-129	CONNECTOR	1				
38	68036-280	WASHER (10.5x18x1.6)	2				
39	816V0800	E-SNAP RING	1				
40	36065-438	COVER	1				
41	342L0616	FLANGE TAPPING BOLT	1				
42	51116-149	HANDLE BRACKET	1				
43	51116-150	HANDLE BRACKET	1				
44	31057-255	HEXAGON BOLT (M8x25)	4				
45	512L0800	HEXAGON NUT	4				
46	11113-408	STAY	2				
47	512L0800	HEXAGON NUT	2				
48	31057-181	HEXAGON BOLT	2				
49	342L0612	FLANGE TAPPING BOLT	4				
50	11113-415	STAY	2				
52	71008-431	GEAR CASE ASS'Y	1				
53	711V0522	SPRING PIN	2				
55	733L1000	SNAP PIN	1				
60	94401-16150	WOODRUFF KEY (16x15)	1				