HANDLE-PRO	Date : 26. Mar, 2012	Revision : 03	Page : 1/1
Brand : KAAZ	Model : LM5360HXA-PRO	Product Code : 620455	

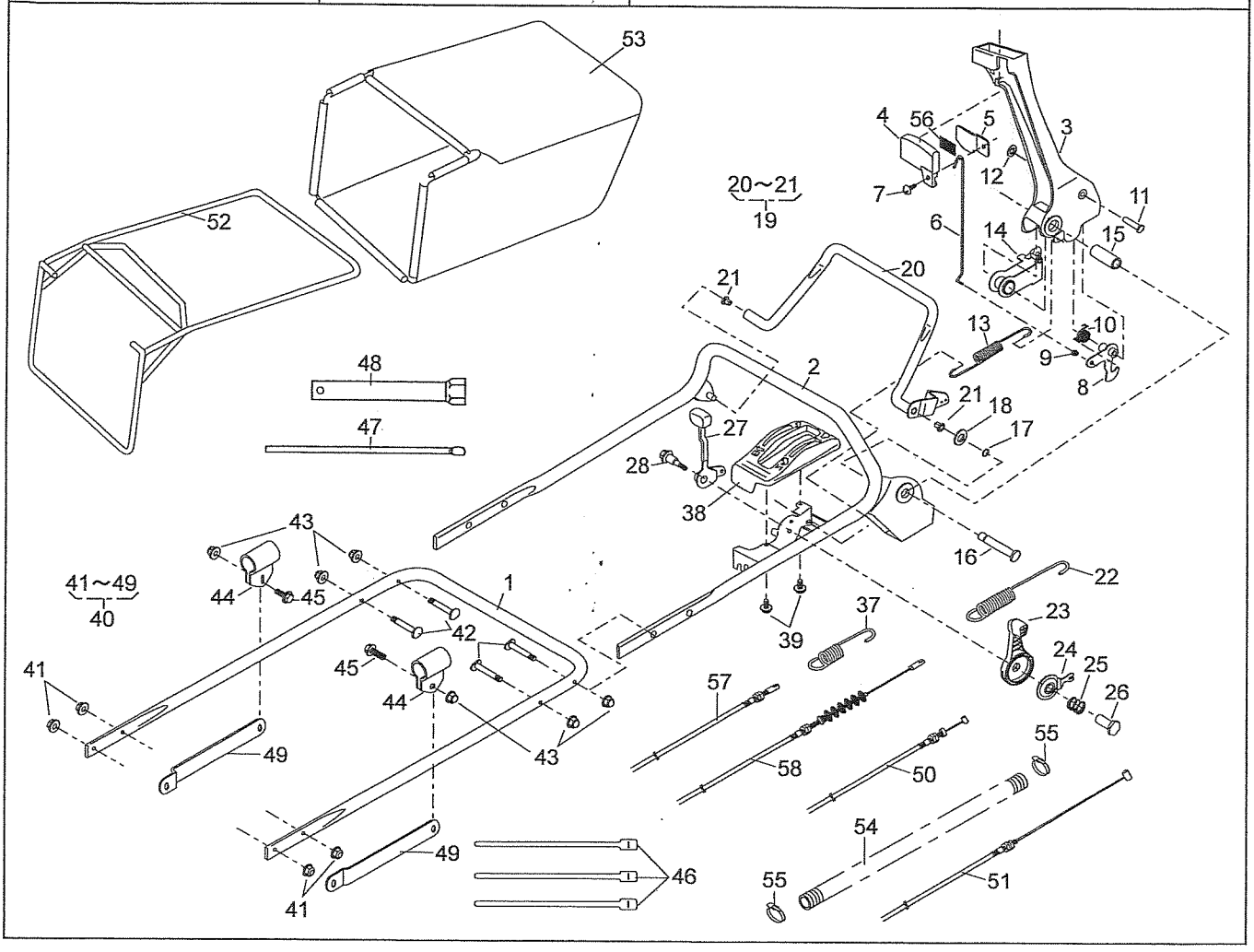

HANDLE-PRO

Brand: KAAZ
P.cd: 620455

Date: 26-Mar-2012
Revision: 03

(A): LM5360HXA-PRO
(B):
(C):

Ref.No	Parts.No	Parts.Name	Q'ty (A)	Q'ty (B)	Q'ty (C)	Remarks	Recomm(%) Lot.100
1	51027-268-103	HANDLE	1				
2	51027-269-103	HANDLE	1				
3	11095-172	LEVER	1				
4	36110-102	BUTTON	1				
5	11049-109	SLIDE PLATE	1				
6	64014-336	SHAFT	1				
7	376L0612	(+)TRUSS SCREW	1				
8	71203-135	ARM C.P.	1				
9	76007-183	BUSH	1				
10	68013-371	SPRING	1				
11	31056-127	GIB-HEADED PIN	1				
12	576V0600	PUSH NUT	1				
13	68013-392	SPRING	1				
14	11109-111	LINK	1				
15	61023-190	SLEEVE	1				
16	64014-337	SHAFT	1				
17	812V0800	C-SNAP RING	1				
18	613L0800	PLAIN WASHER	1				
19	71161-114-09	LEVER ASS'Y	1				
21	76007-131	BUSH	2				
22	68013-391	SPRING	1				
23	91010-169	THROTTLE LEVER	1				
24	61003-113	THRUST PLATE	1				
25	68013-356	SPRING	1				
26	31058-168	HEXAGON NUT	1				
27	11095-117	LEVER	1				
28	31062-109	PRE-COAT LOCK BOLT	1				
37	68013-161	SPRING	1				
38	71900-796	COVER ASS'Y	1				
39	470L0514	(+)TAPPING SCREW	2				
40	71906-556	BOLT SET	1				
41	569L0800	FLANGE NYLON NUT	4				
42	31057-256	HEXAGON BOLT	4				
43	583L0800	FLANGE CAP NUT	6				
44	11012-132	HANGER BAND	2				
45	31057-181	HEXAGON BOLT	2				
46	68028-118	WIRE BAND (GT280)	3				
47	66008-103	PLUG BOX BAR (8x200)	1				
48	66006-125	BOX SPANNER	1				
49	71900-846	BAR SET	1				
50	91001-329	THROTTLE WIRE	1				
51	91003-169	CONTROL CABLE	1				
52	11062-178	FRAME C.P.	1				
53	36098-132	GRASS BAG C.P.	1				
54	41003-201	TUBE (15.6x800L)	1				
55	68028-119	WIRE BAND (SHT18R-W)	2				
56	36080-156	RUBBER SHEET	1				
57	91003-125	CONTROL CABLE	1				
58	91003-180	CONTROL CABLE	1				