GEAR CASE ASS'Y	Date : 01. Dec, 2011	Revision : 01	Page: 1/1
Product code : 71008-431		Model :	

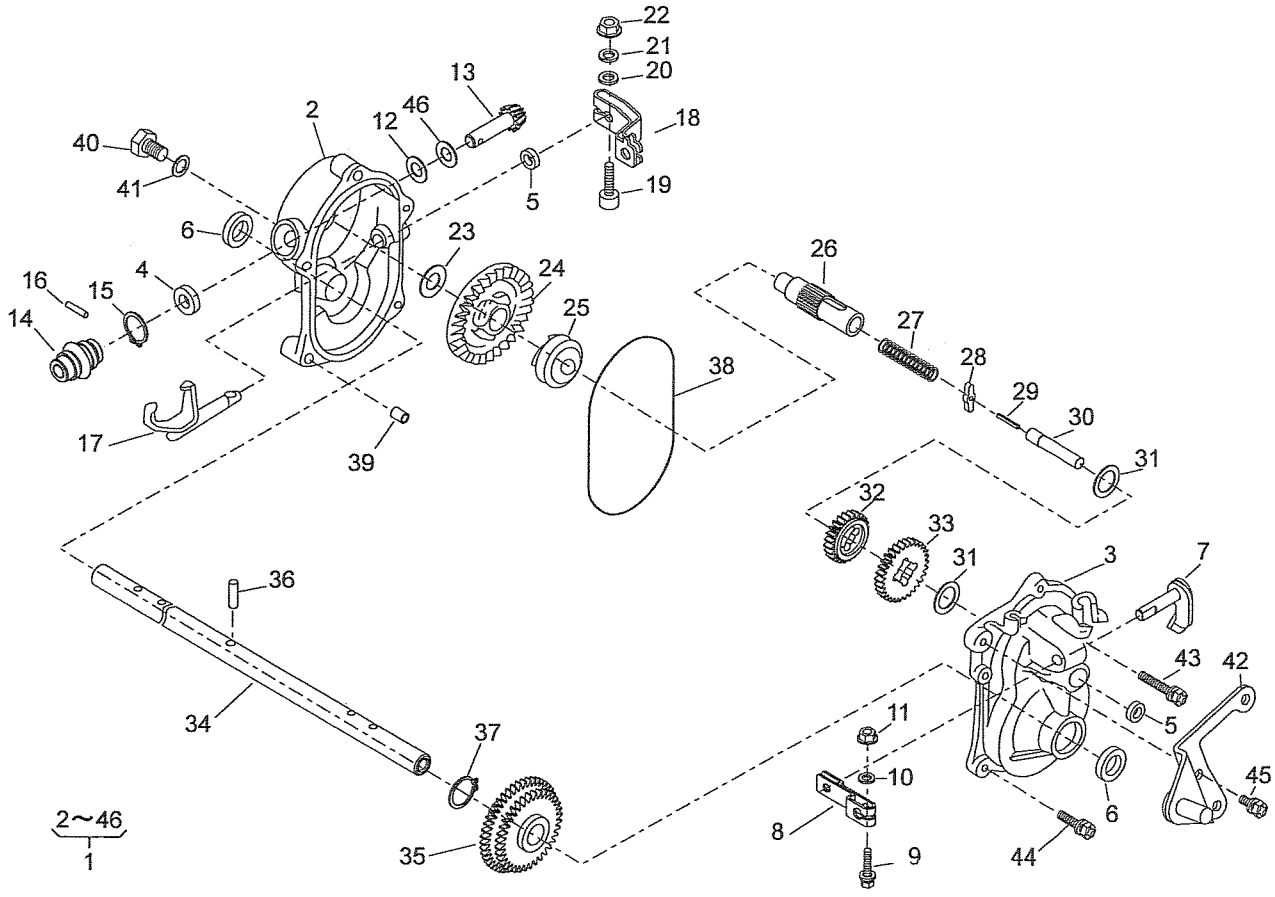

Gear case ass'y

Brand:
P.cd: 71008-431

Date: 1-Dec-2011
Revision: 01

(A):
(B):
(C):

Ref.No	Parts.No	Parts.Name	Q'ty (A)	Q'ty (B)	Q'ty (C)	Remarks	Recomm(%) Lot.100
1	71008-431	GEAR CASE ASS'Y	1				
2	51001-195	GEAR CASE	1				
3	51001-196	GEAR CASE	1				
4	61002-161	OIL SEAL (SD10205)	1				
5	61002-162	OIL SEAL (SD08144)	2				
6	61002-163	OIL SEAL (SD15245)	2				
7	64024-104	SHIFTER SHAFT	1				
8	11104-119	ARM	1				
9	320L0525	(+)HEXAGON BOLT (W/PW)	1				
10	611L0500	PLAIN WASHER	1				
11	571L0500	FLANGE NUT	1				
12	61003-109	THRUST PLATE	1				
13	78003-130	PINION	1				
14	91097-101	UNIVERSAL JOINT	1				
15	812V2000	C-SNAP RING	1				
16	717B0418	PARALLEL PIN	1				
17	11097-106	SHIFTER FORK	1				
18	11104-137	ARM	1				
19	419U0630	SOCKET SCREW	1				
20	611L0600	PLAIN WASHER	1				
21	661L0600	SPRING LOCK WASHER	1				
22	512L0600	HEXAGON NUT	1				
23	61024-117	SPACER	1				
24	78001-162	BEVEL GEAR	1				
25	11129-107	CLUTCH	1				
26	64014-236	SHAFT	1				
27	68013-262	SPRING	1				
28	31034-199	PIN	1				
29	736U0320	SPRING PIN	1				
30	64014-235	SHAFT	1				
31	61024-118	SPACER	2				
32	78004-156	GEAR	1				
33	78004-155	GEAR	1				
34	64014-344	SHAFT	1				
35	78012-107	GEAR C.P.	1				
36	31034-150	PIN	1				
37	812V2200	C-SNAP RING	1				
38	214B11000	O-RING (S110)	1				
39	11083-201	COLLAR	2				
40	31057-262	HEXAGON BOLT	1				
41	68001-110	FIBER WASHER	1				
42	11006-191	STAY C.P.	1				
43	315L0625	(+)HEXAGON BOLT (W/PW,SW)	3				
44	315L0635	(+)HEXAGON BOLT (W/PW,SW)	2				
45	318L0612	(+)HEXAGON BOLT (W/SW)	1				
46	68007-132	SHIM (10.5x18x0.3)	0～2				