BRAKE ASS'Y	*Date :* 01. Dec, 2011	*Revision :* 02	*Page:* 1/1
Product code : 71067-106		*Model :*	

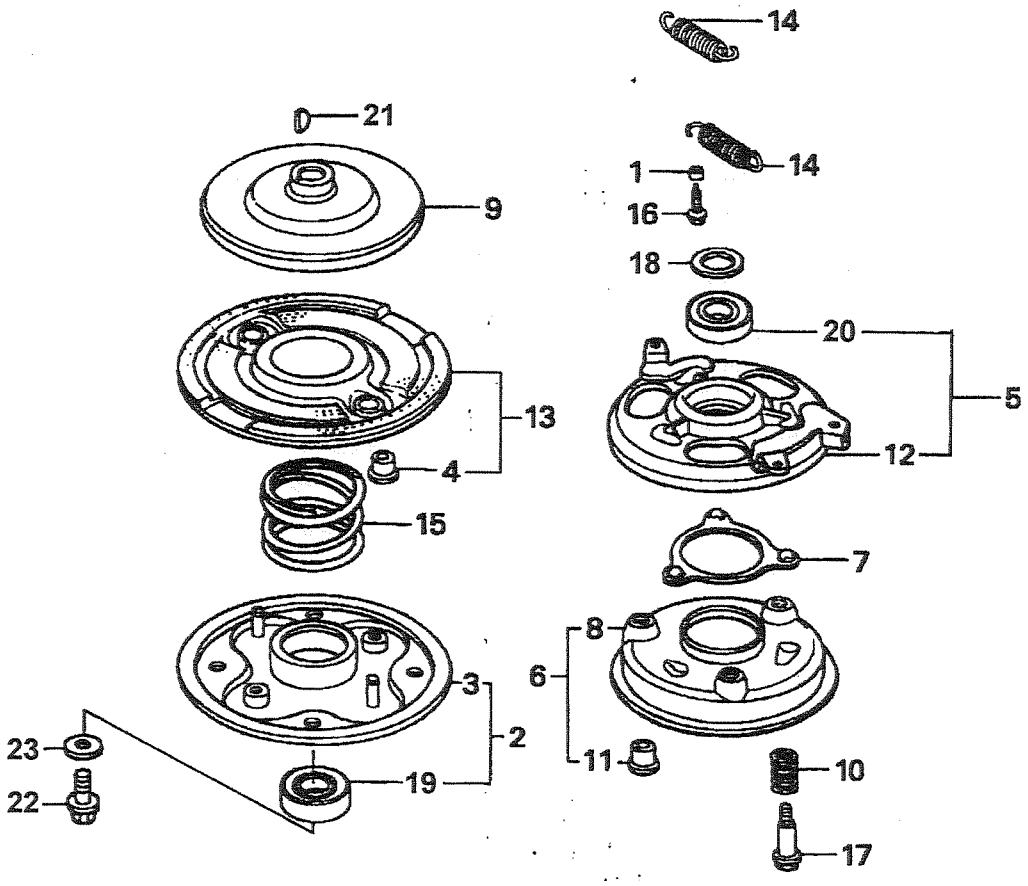

BRAKE ASS'Y

Brand:
P.cd: 71067-106

Date: 1-Dec-2011
Revision: 02

(A): 71067-106
(B):
(C):

Ref.No	Parts.No	Parts.Name	Q'ty (A)	Q'ty (B)	Q'ty (C)	Remarks	Recomm(%) Lot.100
	71067-106	BRAKE ASS'Y	1				
1	19512-883-000	COLLAR, FAN	2				
2	72600-VA4-010	HOLDER ASS'Y, BLADE	1				
3	72610-VA4-000	HOLDER COMP., BLADE	1				
4	72613-VA4-000	BUSH, BLADE HOLDER	2				
5	75090-VA4-030	PLATE ASSY., BALL CONTROL	1				
6	75100-VA4-010	BRAKE COMP.	1				
7	75110-VA4-000	RETAINER COMP., BALL	1				
8	75120-VA4-010	DISK, BRAKE	1				
9	75130-VA4-000	DISK, DRIVE	1				
10	75132-VA4-000	SPRING, BRAKE HOLDER	3				
11	75133-VA4-000	BUSH, BRAKE HOLDER	3				
12	75140-VA4-020	PLATE COMP., BALL CONTROL	1				
13	75150-VA3-J01	DISK COMP., DRIVEN	1				
14	75182-VA3-J00	SPRING, CLUTCH RETURN (53.0M	2				
15	75183-VA3-J00	SPRING, CLUTCH (36.6MM)	1				
16	90014-952-000	BOLT, FLANGE, 6X14(CT200)	4				
17	90021-VA4-000	BOLT, SPECIAL, 6MM	3				
18	90501-952-010	WASHER, THRUST	1				
19	91102-VA4-013	BEARING, RADIAL BALL, 6204	1				
20	91103-VA4-003	BEARING, RADIAL BALL, 60/22	1				
21	94401-16150	KEY, WOODRUFF, 16X15	1				
22	90105-960-003	BOLT, HEX., 10X25	1				
23	90409-952-000	WASHER, 10MM	1				