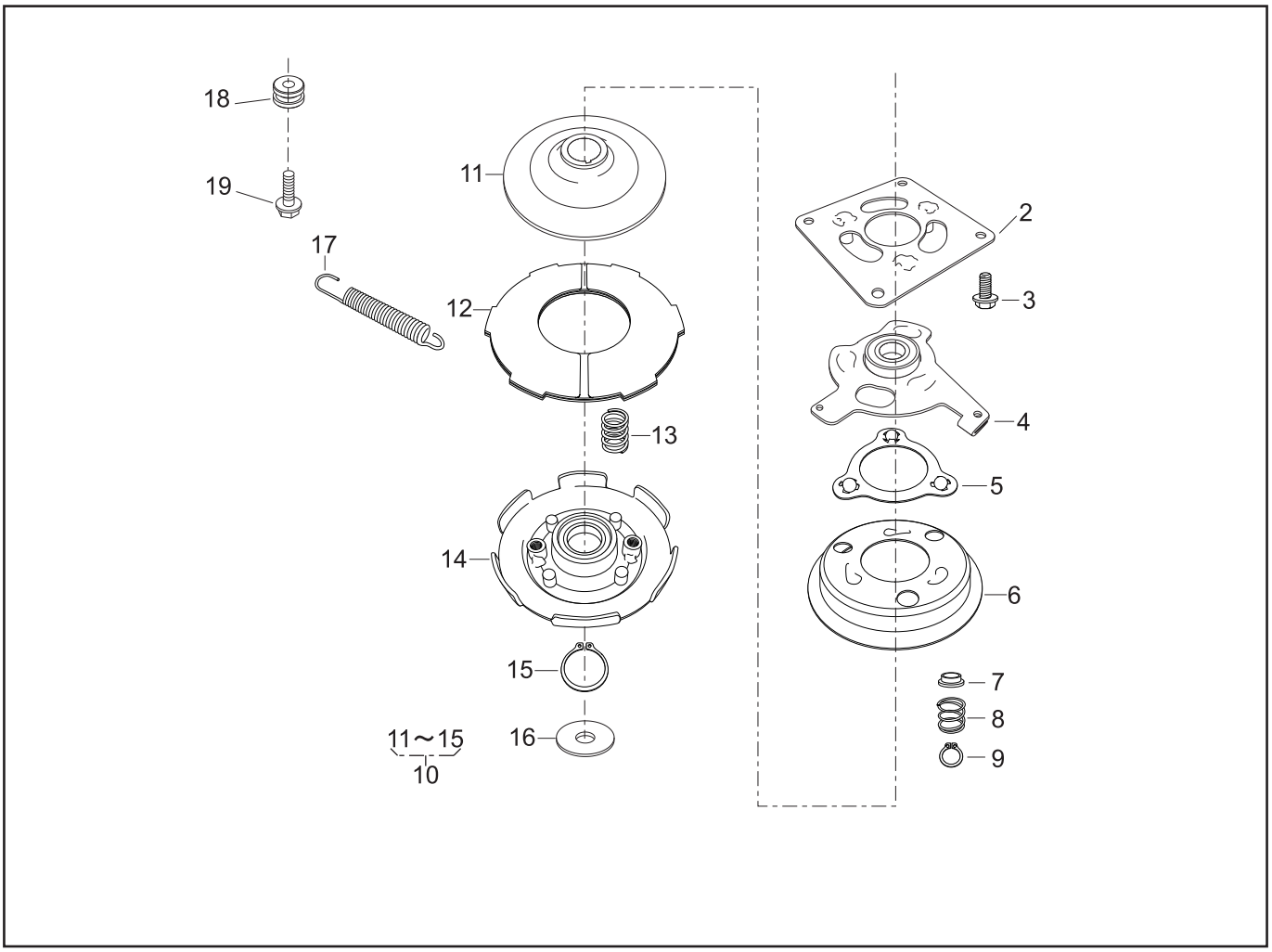

PARTS LIST

BRAKE ASS'Y (71067-116)

46014-387-02

REF. No.	PARTS No.	PARTS NAME	BBC Q'TY	INCLUDING			PRICE( )	1/1 RECOMM.(%) Lot.100		14. Apr. 2006 REMARKS
1	71067 116	BRAKE ASS'Y	1					-		
2	11006 158	STAY C.P.		1				3		
3	335L 0818	HEXAGON BOLT		4				3		
4	11107 116	SWING ARM		1				5		
5	11106 107	RETAINER		1				10		
6	11105 104	BRAKE DRUM		1				5		
7	76007 197	BUSH		3				5		
8	68013 378	SPRING		3				3		
9	812V 1200	C-SNAP RING		3				3		
10	71906 222	BLADE HOLDER ASS'Y		1				-		
11	11096 102	CLUTCH DISK			1			3		
12	68059 104	FRICTION PLATE			1			10		
13	68013 379	SPRING			4			3		
14	11108 101	BLADE HOLDER			1			5		
15	812V 3000	C-SNAP RING			1			3		
16	68036 174	WASHER		1				3		
17	68013 380	SPRING		1				3		
18	11083 270	COLLAR		1				3		
19	342L 0620	FLANGE TAPPING BOLT		1				3		
20										
21										
22										
23										
24										
25										
26										
27										
28										