BRAKE ASS'Y	*Date :* 15. Jun, 2015	*Revision :* 00	*Page:* 1/1
Product code : 71067-120		*Model :*	

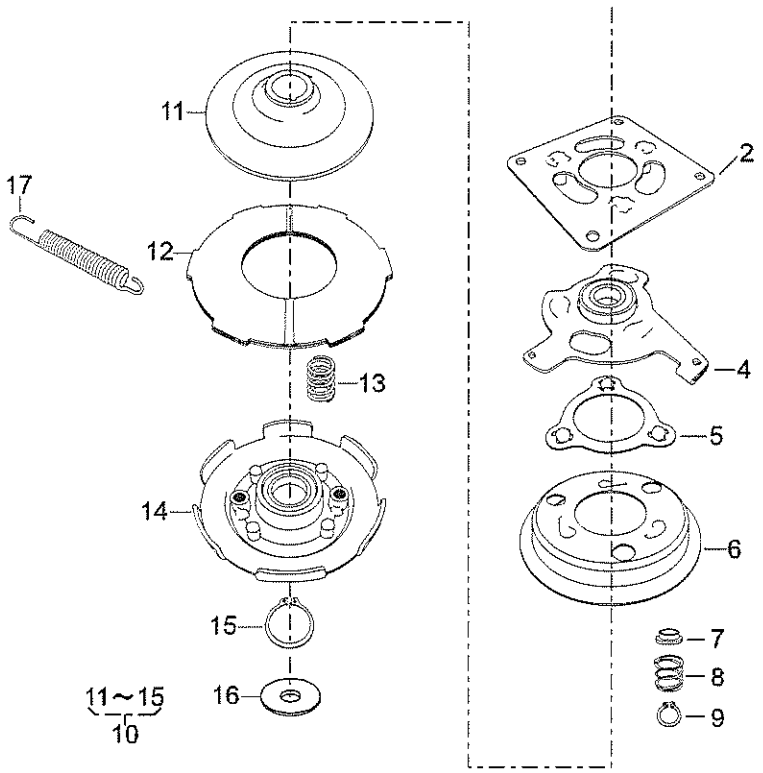

BRAKE ASS'Y (A): 71067-120

Brand: Date: 15-Jun-2015 (B):

P.cd: 71067-120 Revision: 00 (C):

Ref.No	Parts.No	Parts.Name	Q'ty			Remarks	Recomm(%) Lot.100
			(A)	(B)	(C)		
1	71067-120	BRAKE ASS'Y	1				-
2	11006-158	STAY C.P.	1				3
4	11107-116	SWING ARM	1				5
5	11106-107	RETAINER	1				10
6	11105-104	BRAKE DRUM	1				5
7	76007-197	BUSH	3				5
8	68013-378	SPRING	3				3
9	812V1200	C-SNAP RING	3				3
10	71906-222	BLADE HOLDER ASS'Y	1				-
11	11096-102	CLUTCH DISK	1				3
12	68059-104	FRICTION PLATE	1				10
13	68013-379	SPRING	4				3
14	11108-101	BLADE HOLDER	1				5
15	812V3000	C-SNAP RING	1				3
16	68036-174	WASHER (10x37x4.5)	1				3
17	68013-380	SPRING	1				3