COVER UNIT	*Date :* 17. Nov, 2010	*Revision :* 01	*Page:* 1/1
Product code : For Housing (51043-151, -154)		*Model :*	

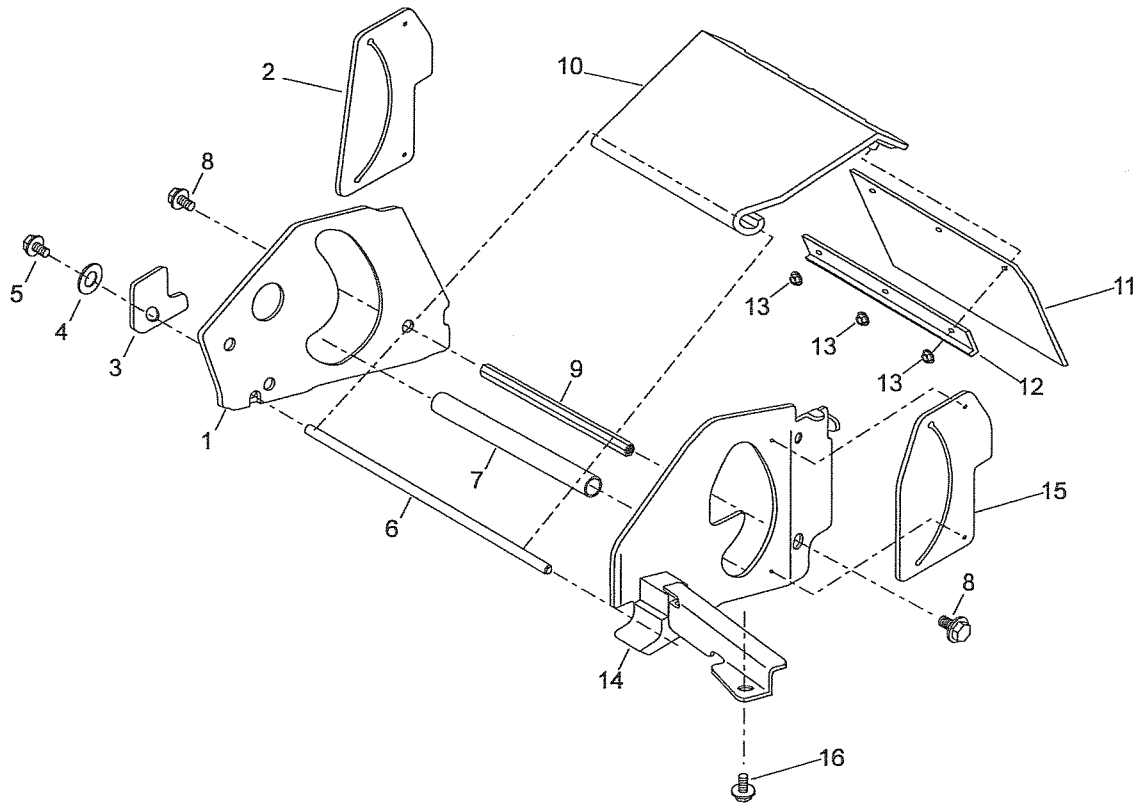

COVER UNIT

Brand:

P.cd: For Housing (51043-151,-154)

Date: 17-Nov-2010

Revision: 02

(A): For Housing (51043-151,-154)

(B):

(C):

Ref.No	Parts.No	Parts.Name	Q'ty (A)	Q'ty (B)	Q'ty (C)	Remarks	Recomm(%) Lot.100
1	11006-166	STAY C.P.	1				
2	36080-154	RUBBER SHEET	1				
3	11113-420	STAY	1				
4	613L0800	PLAIN WASHER	1				
5	423U0812	SOCKET SCREW FLANGE	1				
6	64014-373	SHAFT	1				
7	11083-387	COLLAR	1				
8	31057-181	HEXAGON BOLT	2				
9	64014-374	SHAFT	1				
10	51079-124	COVER C.P.	1				
11	36080-153	RUBBER SHEET	1				
12	11050-182	FIXING PLATE	1				
13	569L0400	FLANGE NYLON NUT	3				
14	11006-167	STAY C.P.	1				
15	36080-155	RUBBER SHEET	1				
16	342L0612	FLANGE TAPPING BOLT	1				