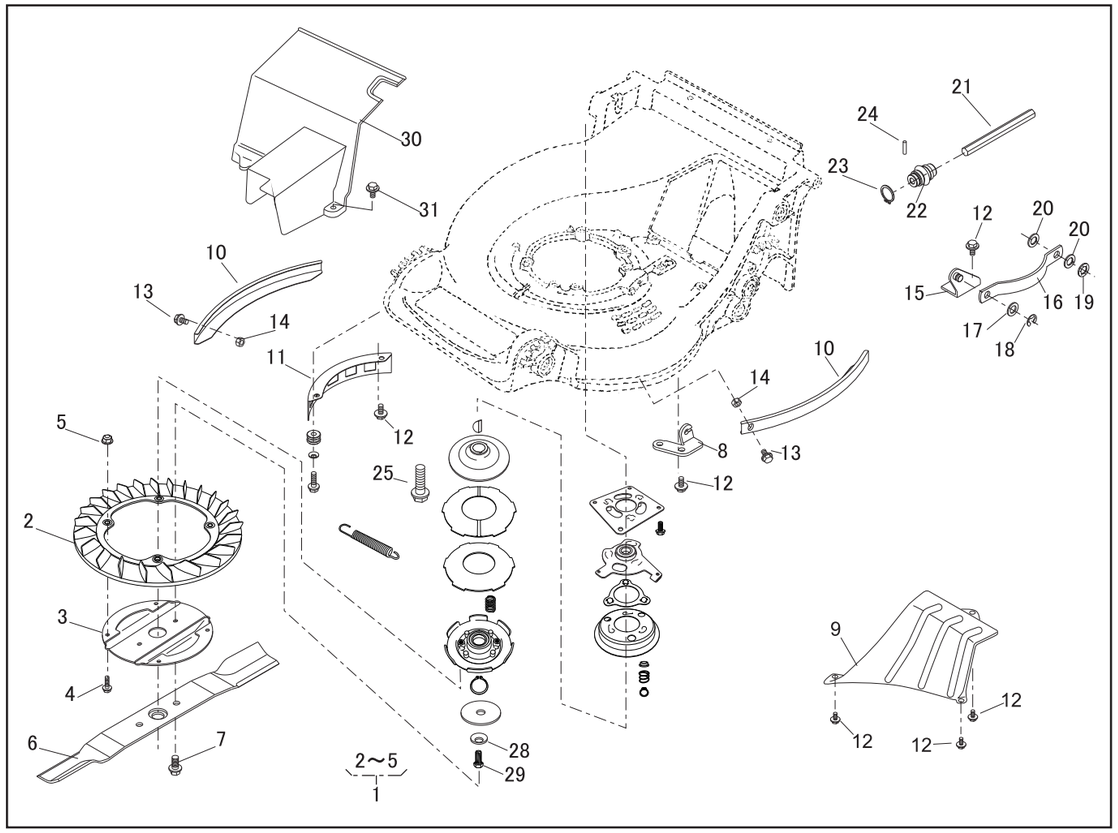

PARTS LIST

MODEL : LM4850KXR (KAAZ)

46014-285

REF. No.	PARTS No.	PARTS NAME	GRASS-CUTTING Q'TY	INCLUDING			PRICE( )	1/2 RECOMM.(%) Lot.100		Apr.28,2005 REMARKS
1	71082 111	FAN ASSY	1					-		
2	51125 103	FAN		1				5		
3	11102 151	HOLDER		1				5		
4	31062 169	PRE-COAT LOCK BOLT		4				5		M6×16
5	579L 0600	FLANGE NUT		4				5		M6
6	91014 165	BLADE	1					15		
7	335M 1020	FLANGE BOLT	2					15		M10×20
8	51002 118	WIRE HOLDER	1					3		
9	36065 400	COVER	1					10		
10	51090 128 09	PROTECTOR	2					5		
11	36065 180	COVER	1					3		
12	342L 0612	FLANGE BOLT TAPPING	8					3		M6×12
13	335L 0616	FLANGE BOLT	4					5		M6×16
14	512L 0600	HEXAGON NUT	4					3		M6
15	11006 113	STAY C.P.	1					5		
16	91049 126	CONNECTOR	1					5		
17	68036 280	WASHER	1					3		M10
18	816V 0800	E-SNAP RING	1					5		ϕ8
19	576V 1000	PUSH NUT	1					5		ϕ10
20	68001 110	FIBER WASHER	2					5		
21	64014 360	SHAFT	1					3		
22	91097 101	UNIVERSAL JOINT	1					3		
23	812V 2000	C-SNAP RING FOR SHAFT		1				1		ϕ20
24	717B 0418	PARALLEL PIN		1				5		ϕ4×18
25	335L 1040	HEXAGON BOLT	4					3		M10×40
26										
27										

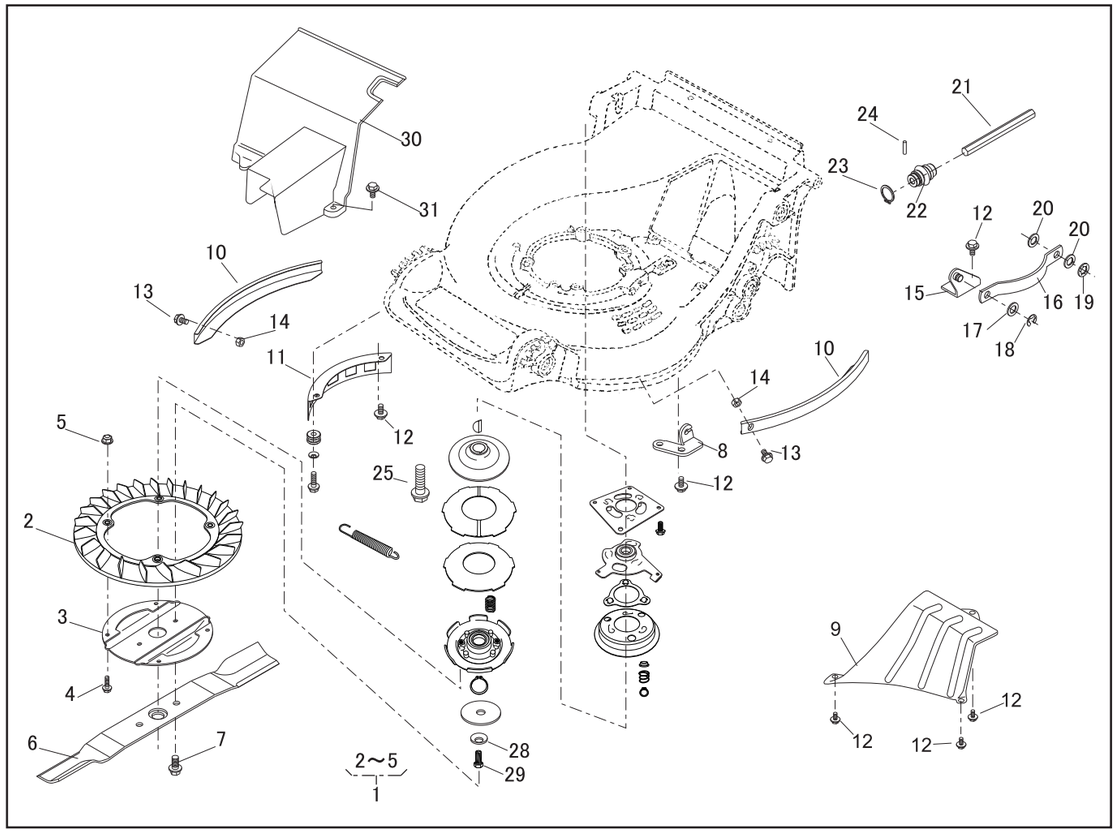

PARTS LIST

MODEL : LM4850KXR (KAAZ)

46014-285

REF. No.	PARTS No.	PARTS NAME	GRASS-CUTTING Q'TY	INCLUDING			PRICE( )	2/2 RECOMM.(%) Lot.100		Apr.28,2005 REMARKS
28	671V 1000	CONICAL SPRING WASHER	1					3		
29	31057 259	HEXAGON BOLT	1					3		
30	36065 426	COVER	1					3		
31	342L 0616	FLANGE BOLT TAPPING	1					3		M6×16
32										
33	71067 115	BRAKE ASSY	1					-		
34										
35										
36										
37										
38										
39										
40										
41										
42										
43										
44										
45										
46										
47										
48										
49										
50										
51										
52										