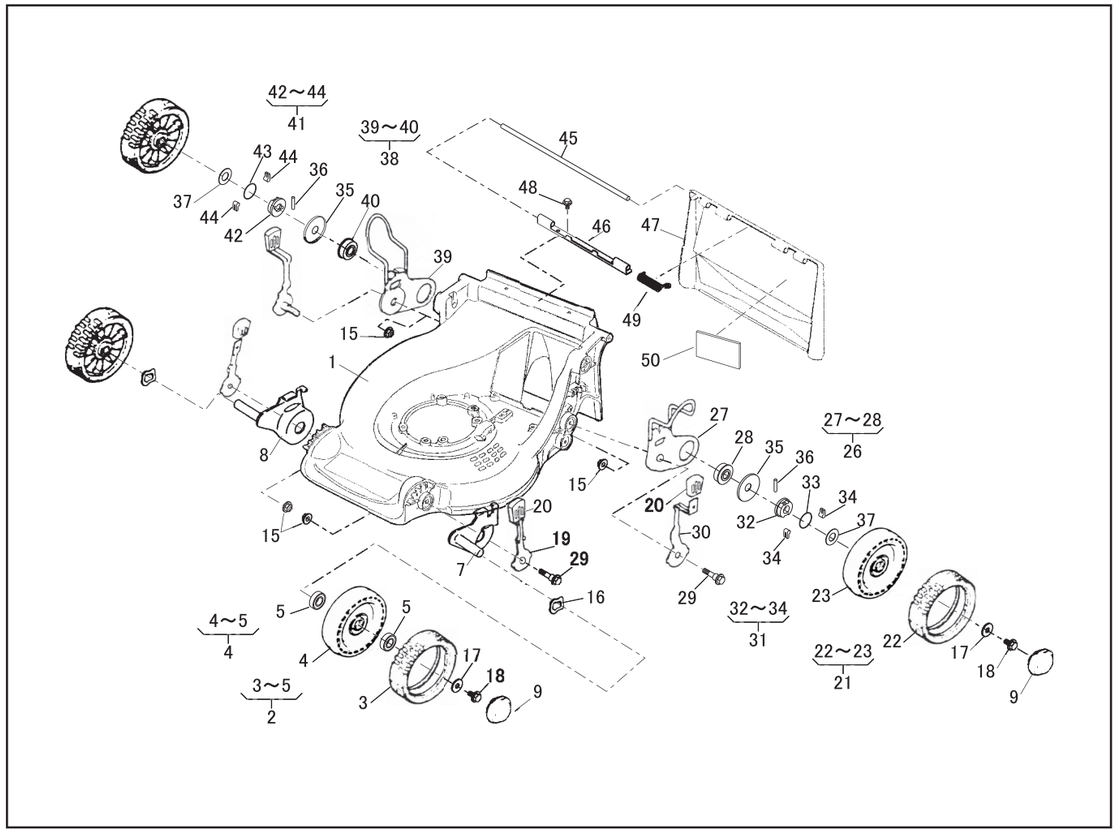

PARTS LIST

MODEL : LM4850KX (KAAZ)

46014-119

					WHEEL					1/2		Jan.25,2003
REF. No.	PARTS No.			PARTS NAME	Q'TY	INCLUDING			PRICE( )	RECOMM.(%) Lot.100		REMARKS
1	51043	146	42	HOUSING	1					3		
2	71041	103		WHEEL ASSY	2					3		
3	91086	102		TIRE		2				15		
4	36107	102		WHEEL		2				3		
5	932L	0696		BEARING			4			5		
6												
7	11142	112		ADJUSTER	2					5		
8	11142	113		ADJUSTER	2					5		
9	36070	110		CAP	4					3		
10												
11												
12												
13												
14												
15	569L	0800		FLANGE NYLON NUT	4					10		M8
16	664V	0626		WAVE SPRING WASHER	2					5		
17	68036	101		WASHER	4					3		
18	31057	181		HEXAGON BOLT	4					3		
19	11150	101	09	ADJUST LEVER	2					5		
20	36061	121		KNOB	4					3		
21	71041	112		WHEEL ASSY	2					3		
22	91086	106		TIRE		2				15		
23	36107	101		WHEEL		2				3		
24												
25												
26	71122	101		ADJUSTER ASSY(L)	1					-		
27	11142	104		ADJUSTER		1				3		

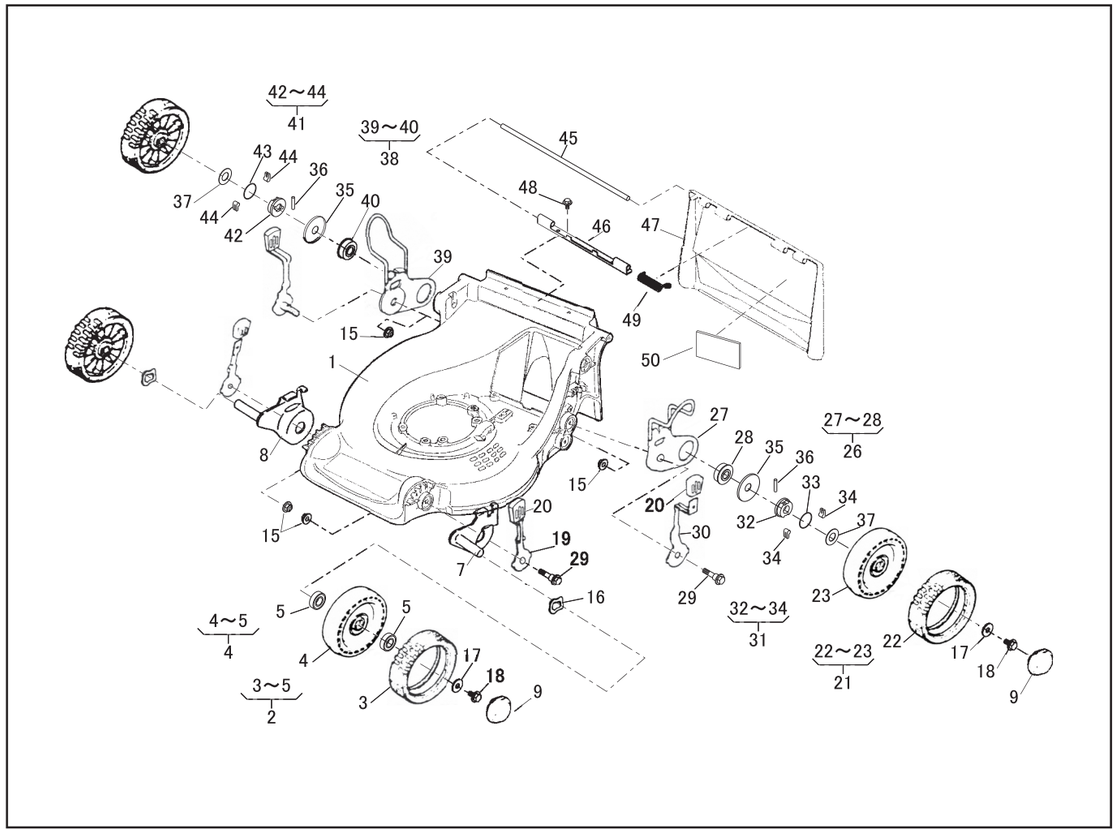

PARTS LIST

MODEL : LM4850KX (KAAZ)

46014-119

					WHEEL					2/2		Jan.25,2003
REF. No.	PARTS No.			PARTS NAME	Q'TY	INCLUDING			PRICE( )	RECOMM.(%) Lot.100		REMARKS
28	945L	0349		BEARING		1				10		
29	31057	132		HEXAGON BOLT	4					5		
30	11150	102	09	ADJUST LEVER	2					5		
31	71158	102		RATCHET ASSY(L)	1					-		
32	11102	138		HOLDER		1				3		
33	68013	266		SPRING		1				5		
34	31034	170		PIN		2				3		
35	61003	112		THRUST PLATE	2					10		
36	31034	137		PIN	2					10		
37	68036	146		WASHER	2					3		
38	71122	102		ADJUSTER ASSY(R)	1					-		
39	11142	105		ADJUSTER		1				3		
40	945L	0349		BEARING		1				10		
41	71158	101		RATCHET ASSY(R)	1					3		
42	11102	138		HOLDER		1				3		
43	68013	266		SPRING		1				5		
44	31034	170		PIN		2				3		
45	64014	324		SHAFT	1					3		
46	11113	292		STAY	1					3		
47	36068	188	46	GUARD	1					3		
48	342J	0612		FLANGE BOLT TAPPING	2					3		M6 × 12
49	68013	336		SPRING	1					3		
50	36080	149		RUBBER SHEET	1					3		
51												
52												
53												
54												