9.6"Al-WHEEL-HST-PRO	Date : 01. Dec, 2011	Revision : 02	Page : 1/1
Brand : KAAZ	Model : LM5360HXA-HST-PRO	Product Code : 620555	

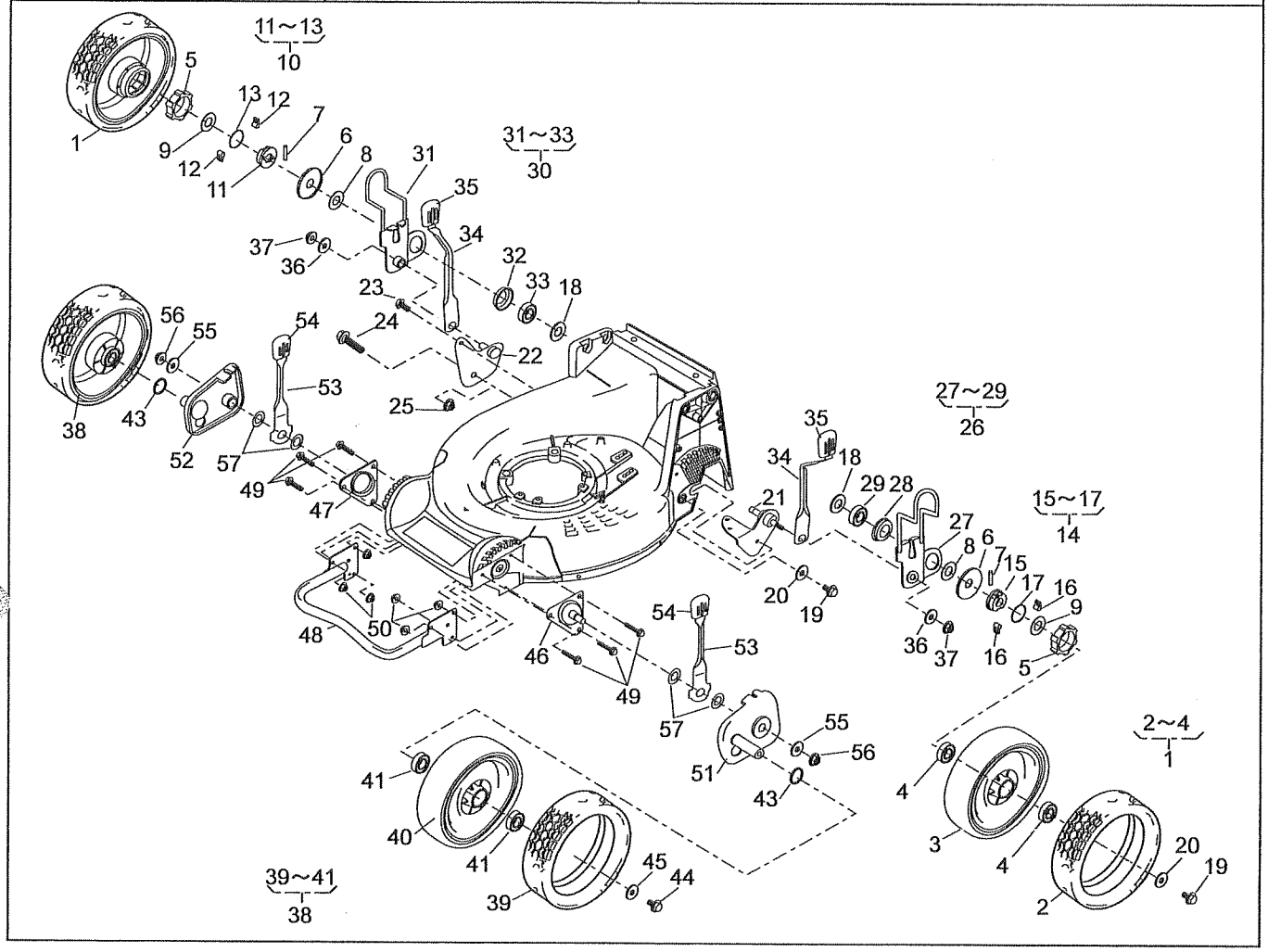

9.6"Al-WHEEL-HST-PRO

Brand: KAAZ
P.cd: 620555

Date: 1-Dec-2011
Revision: 02

(A): LM5360HXA-HST-PRO
(B):
(C):

Ref.No	Parts.No	Parts.Name	Q'ty (A)	Q'ty (B)	Q'ty (C)	Remarks	Recomm(%) Lot.100
1	71041-144	WHEEL ASS'Y	2				
2	91086-116	TIRE	2				
4	916B6002	BEARING (6002DDC3)	4				
5	11086-119	STOPPER	2				
6	61003-112	THRUST PLATE	2				
7	31034-137	PIN	2				
8	68036-270	WASHER (15.2x26x1.6)	2				
9	68036-146	WASHER (16x31.5x1.0)	2				
10	71158-104	RATCHET ASS'Y	1				
11	11102-235	HOLDER	1				
12	31034-170	PIN	2				
13	68013-266	SPRING	1				
14	71158-103	RATCHET ASS'Y	1				
15	11102-235	HOLDER	1				
16	31034-170	PIN	2				
17	68013-266	SPRING	1				
18	68036-275	WASHER (15.2x26x3.2)	2				
19	31057-181	HEXAGON BOLT	3				
20	68036-101	WASHER (9x25x2.3)	3				
21	11006-162	STAY C.P.	1				
22	11006-152	STAY C.P.	1				
23	342L0612	FLANGE TAPPING BOLT	1				
24	31057-255	HEXAGON BOLT (M8x25)	1				
25	584L0800	U-FLANGE NUT	1				
26	71122-110	ADJUSTER ASS'Y	1				
27	11142-125	ADJUSTER	1				
28	11102-228	HOLDER	1				
29	916B6202	BEARING (6202DDC3)	1				
30	71122-111	ADJUSTER ASS'Y	1				
31	11142-126	ADJUSTER	1				
32	11102-228	HOLDER	1				
33	916B6202	BEARING (6202DDC3)	1				
34	11150-105-09	ADJUST LEVER	2				
35	36061-121	KNOB	2				
36	613L0800	PLAIN WASHER	2				
37	569L0800	FLANGE NYLON NUT	2				
38	71041-145	WHEEL ASS'Y	2				
39	91086-116	TIRE	2				
41	916B6002	BEARING (6002DDC3)	4				
43	51113-119	RING	2				
44	31057-181	HEXAGON BOLT	2				
45	68036-101	WASHER (9x25x2.3)	2				
46	11006-153	STAY C.P.	1				
47	11006-154	STAY C.P.	1				
48	11153-112	BUMPER	1				
49	335L0625	FLANGE BOLT	6				
50	569L0600	FLANGE NYLON NUT	6				
51	11142-127	ADJUSTER	1				
52	11142-128	ADJUSTER	1				
53	11150-109-09	ADJUST LEVER	2				
54	36061-121	KNOB	2				
55	68036-101	WASHER (9x25x2.3)	2				
56	31058-176	NUT	2				
57	68013-393	SPRING	4				