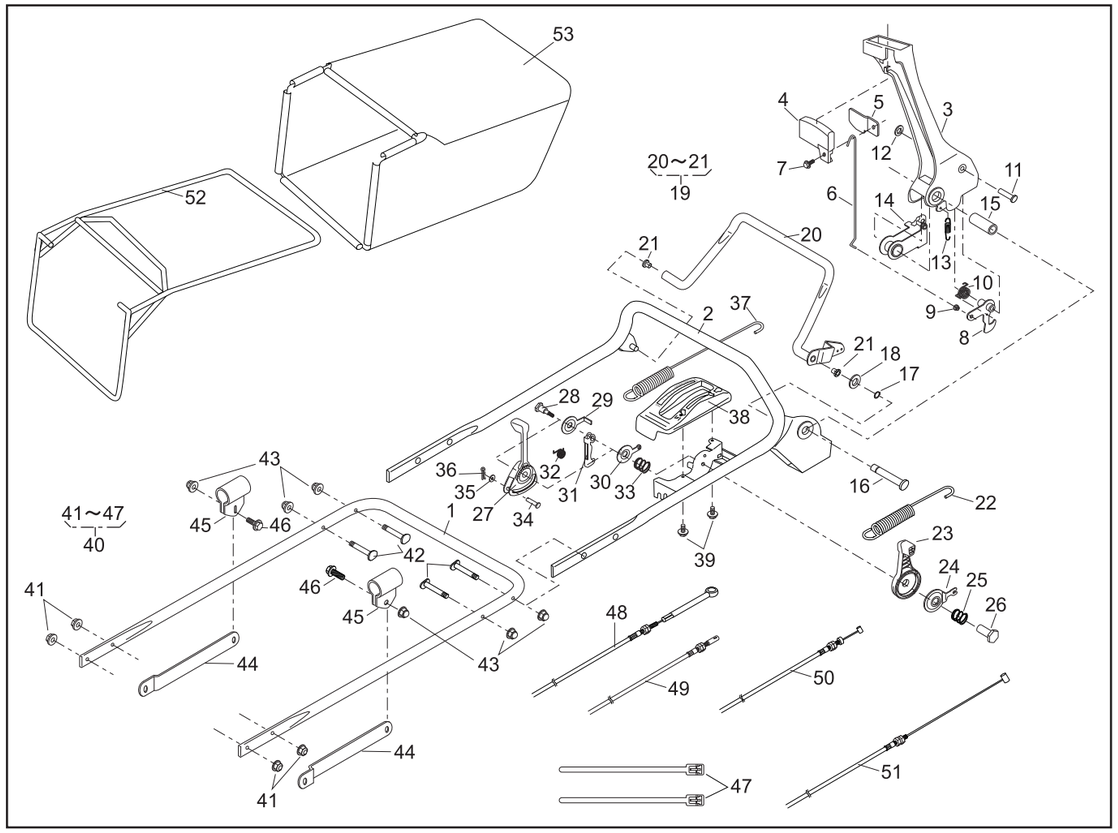

PARTS LIST

46014-356-00

REF. No.	PARTS No.	PARTS NAME	HANDLE-HST-Pro Q'TY	INCLUDING			PRICE( )	1/2 RECOMM.(%) Lot.100		Dec.29,2005 REMARKS
1	51027 249	HANDLE	1							
2	51027 250	HANDLE	1							
3	11095 172	LEVER(BBC)	1							
4	36110 102	BUTTON	1							
5	11049 109	SLIDE PLATE	1							
6	64014 336	SHAFT	1							
7	335N 0612	FLANGE BOLT	1							
8	71203 135	ARM C.P.	1							
9	76007 183	BUSH	1							
10	68013 371	SPRING	1							
11	31056 127	GIB-HEADED PIN	1							
12	576V 0600	PUSH NUT	1							
13	68013 372	SPRING	1							
14	11109 111	LINK	1							
15	61023 190	SLEEVE	1							
16	64014 337	SHAFT	1							
17	812V 0800	C-SNAP RING	1							
18	613L 0800	PLAIN WASHER	1							
19	71161 114 09	LEVER ASS'Y	1							
20		LEVER		1						
21	76007 131	BUSH		2						
22	68013 385	SPRING	1							
23	91010 169	THROTTLE LEVER(GXV120/GXV160)	1							
24	61003 113	THRUST PLATE	1							
25	68013 356	SPRING	1							
26	31058 168	HEXAGON NUT	1							
27	11095 162	LEVER(HST)	1							
28	31057 249	HEXAGON BOLT	1							

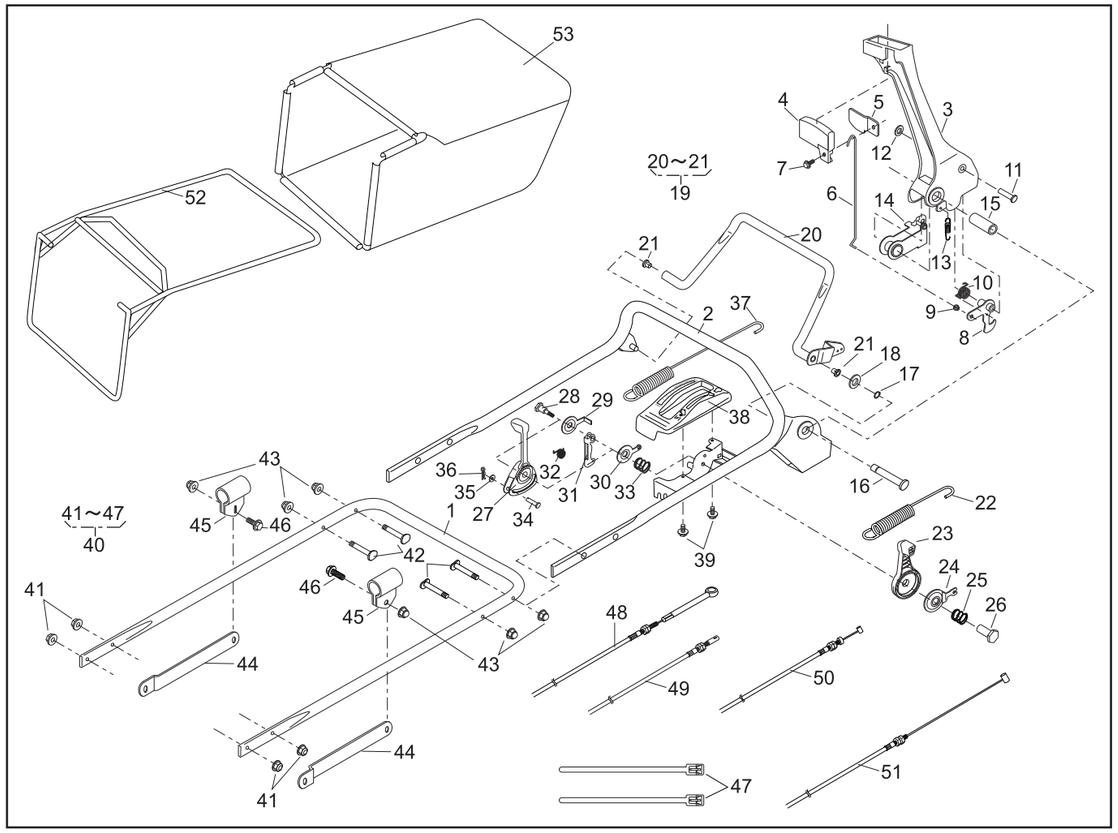

PARTS LIST

46014-356-00

REF. No.	PARTS No.	PARTS NAME	HANDLE-HST-Pro Q'TY	INCLUDING			PRICE( )	2/2 RECOMM.(%) Lot.100		Dec.29,2005 REMARKS
29	61003 118	THRUST PLATE	1							
30	11049 108	SLIDE PLATE	1							
31	11109 112	LINK	1							
32	68013 369	SPRING	1							
33	68013 356	SPRING	1							
34	31056 126	GIB-HEADED PIN	1							
35	613L 0600	PLAIN WASHER	1							
36	733L 0600	SNAP PIN	1							
37	68013 375	SPRING	1							
38	71900 811	COVER ASS'Y	1							
39	470L 0514	(+)TAPPING SCREW	2							
40	71900 845	BOLT SET	1							
41	569L 0800	FLANGE NYLON NUT		4						
42	31057 256	HEXAGON BOLT		4						
43	583L 0800	FLANGE CAP NUT		6						
44	71900 846	BAR SET		1						
45	11012 132	HANGER BAND		2						
46	31057 181	HEXAGON BOLT		2						
47	68028 103	WIRE BAND		2						
48	91003 178	CONTROL CABLE	1							
49	91003 179	CONTROL CABLE	1							
50	91001 329	THROTTLE WIRE(GXV120/GXV160)	1							
51	91003 169	CONTROL CABLE(BBC)	1							
52	11062 178	FRAME C.P.	1							
53	36098 132	GRASS BAG C.P.(KAAZ)	1							
54										
55										
56										