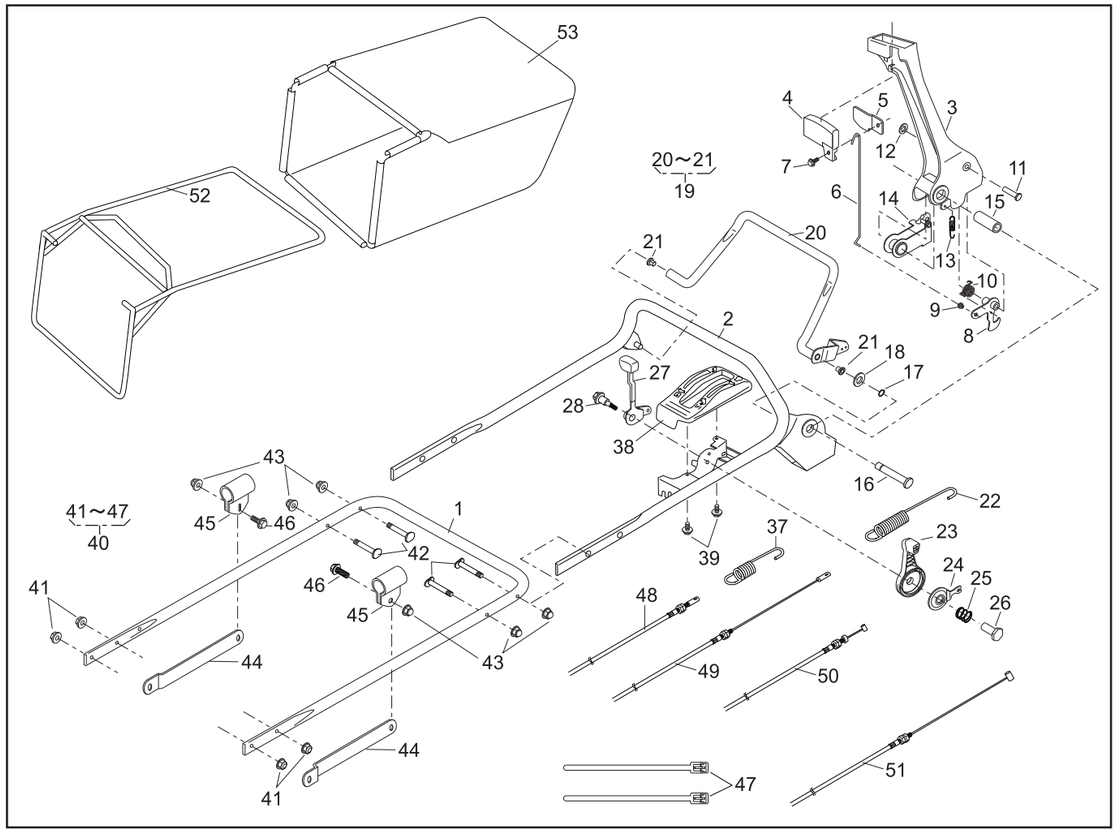

PARTS LIST

Serial No. 3000001～

46014-245

REF. No.	PARTS No.	PARTS NAME	HANDLE-Pro Q'TY	INCLUDING			PRICE( )	1/2 RECOMM.(%) Lot.100		Feb.08,2005 REMARKS
1	51027 249	HANDLE	1							
2	51027 250	HANDLE	1							
3	11095 172	LEVER(BBC)	1							
4	36110 102	BUTTON	1							
5	11049 109	SLIDE PLATE	1							
6	64014 336	SHAFT	1							
7	335N 0612	FLANGE BOLT	1							
8	71203 135	ARM C.P.	1							
9	76007 183	BUSH	1							
10	68013 371	SPRING	1							
11	31056 127	GIB-HEADED PIN	1							
12	576V 0600	PUSH NUT	1							
13	68013 372	SPRING	1							
14	11109 111	LINK	1							
15	61023 190	SLEEVE	1							
16	64014 337	SHAFT	1							
17	812V 0800	C-SNAP RING FOR SHAFT	1							
18	613L 0800	WASHER	1							
19	71161 114 09	LEVER ASSY	1							
20		LEVER		1						
21	76007 131	BUSH		2						
22	68013 374	SPRING	1							
23	91010 147	THROTTLE LEVER(FC150V/FC180V)	1							
24	61003 113	THRUST PLATE	1							
25	68013 356	SPRING	1							
26	31058 168	NUT	1							
27	11095 117	LEVER	1							
28	31062 109	PRE-COAT LOCK BOLT	1							

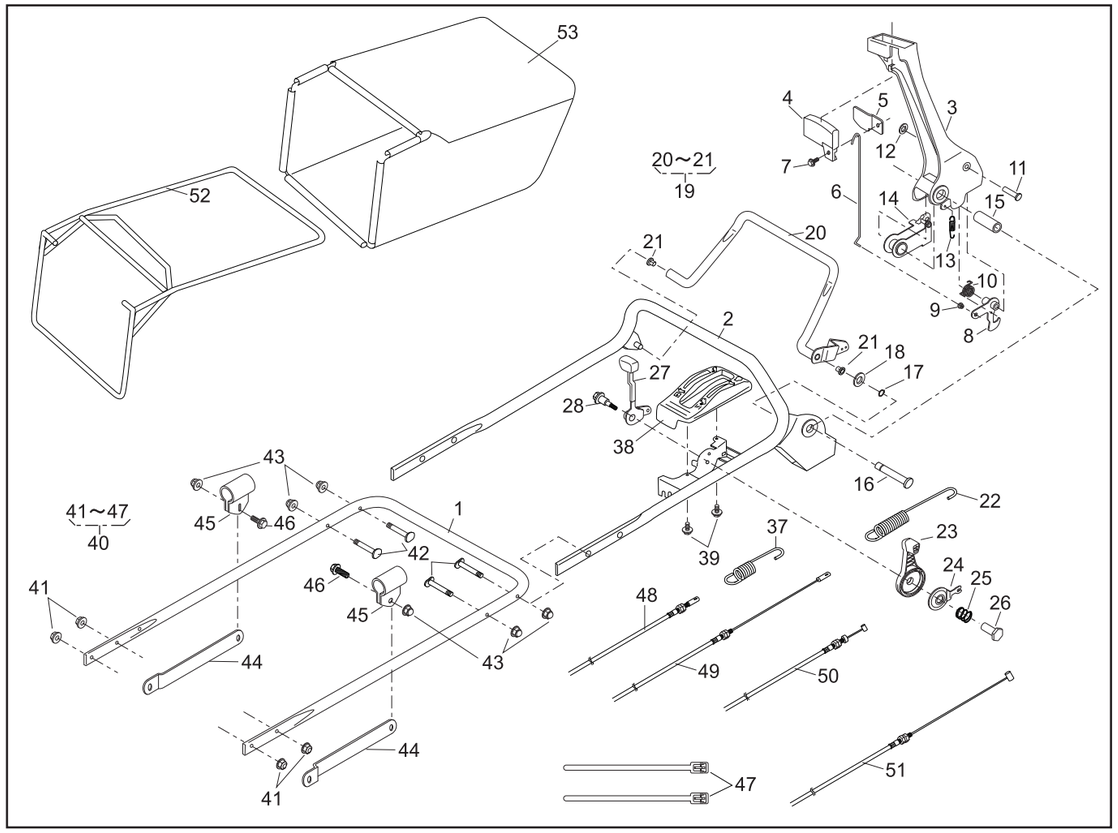

PARTS LIST

Serial No. 3000001～

46014-245

REF. No.	PARTS No.	PARTS NAME	HANDLE-Pro Q'TY	INCLUDING			PRICE( )	2/2 RECOMM.(%) Lot.100		Feb.08,2005 REMARKS
29										
30										
31										
32										
33										
34										
35										
36										
37	68013 161	SPRING	1							
38	71900 794	COVER ASSY	1							
39	470L 0514	(+)TAPPING SCREW	2							
40	71900 845	BOLT SET	1							
41	569L 0800	FLANGE NYLON NUT		4						
42	31057 256	BOLT		4						
43	583L 0800	FLANGE CAP NUT		6						
44	71900 846	BAR SET		1						
45	11012 132	HANGER BAND		2						
46	31057 181	HEXAGON BOLT		2						
47	68028 103	WIRE BAND		2						
48	91003 125	CONTROL CABLE	1							
49	91003 170	CONTROL CABLE	1							
50	91001 328	THROTTLE WIRE(FC180V)	1							
51	91003 169	CONTROL CABLE(BBC)	1							
52	11062 178	FRAME C.P.	1							
53	36098 132	GRASS BAG C.P.(KAAZ)	1							
54										
55										
56										